		PATT OR DIE No.	FINISH
LETTER CHANGE	MATERIAL	WEIGHT	

UNLESS OTHERWISE SPECIFIED
DECIMAL
DIM'S IN 2 PLACES + or - .02
DIM'S IN 3 PLACES + or - .01

FRACTION
DIM'S UNDER 6" + or -
DIM'S OVER 6" + or -

REF. Nos.

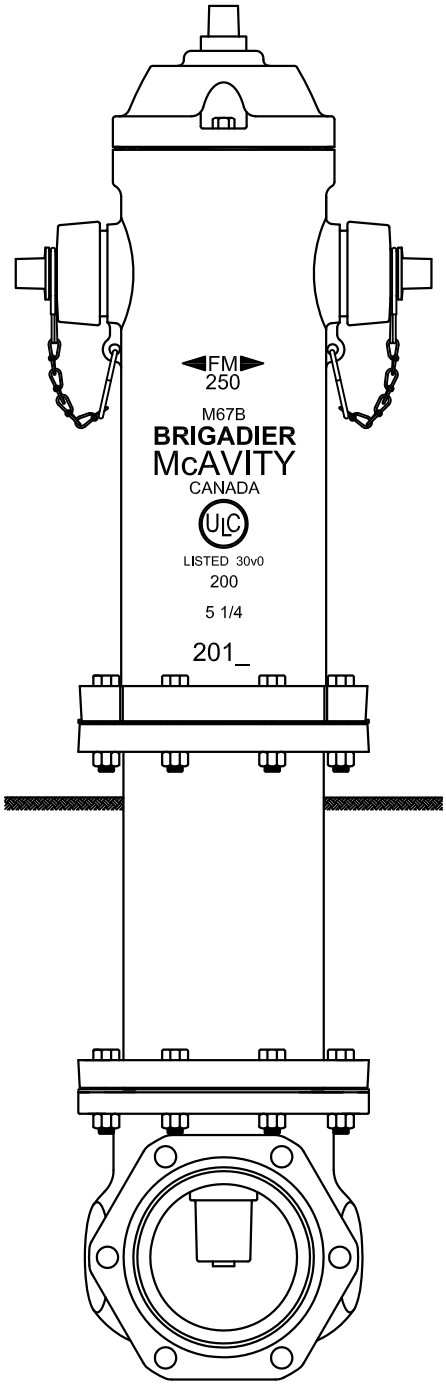

DRAWN	CHECKED	EXAMINED	NOTED	APPROVED
L.G. McKAY				

M67B 2 PRISES 2 ½"
SOCLE 6" JOINT MÉCANIQUE

CLOW CANADA

SCALE DESSIN PAS À L'ÉCHELLE DATE SEPT. / 2010

M67B - 101